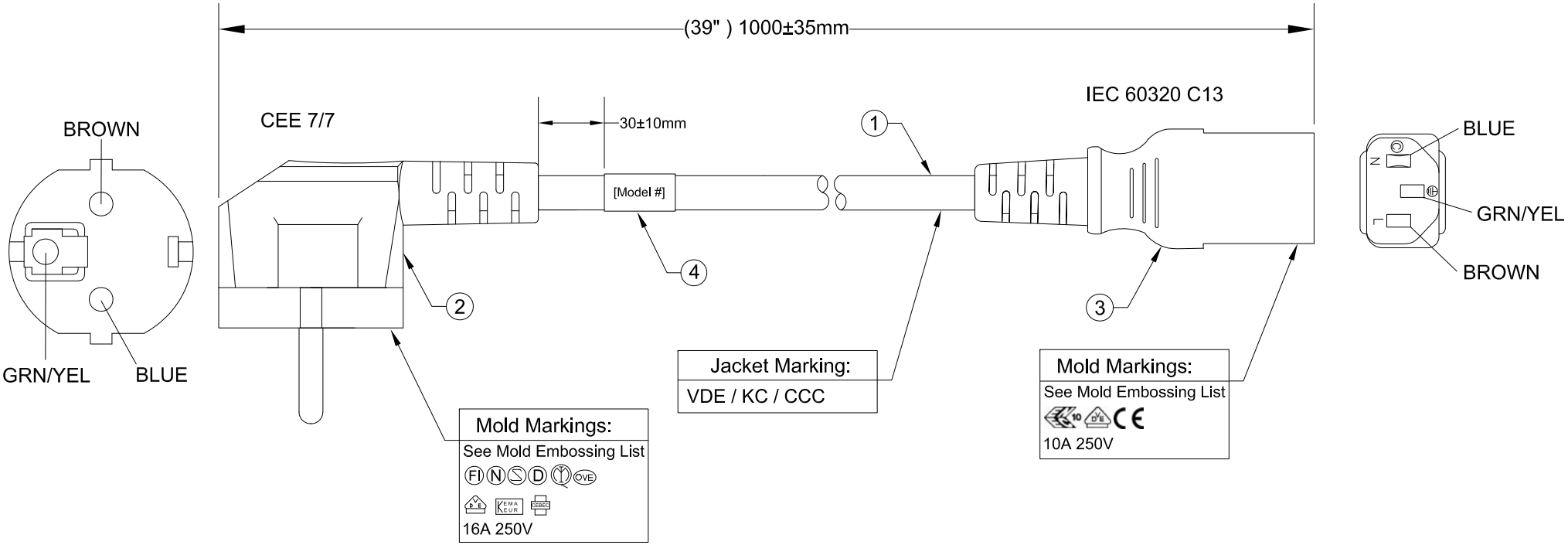

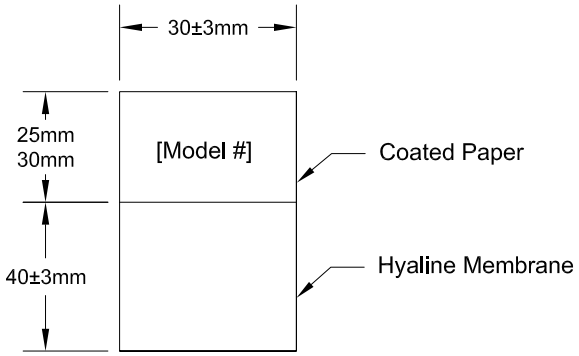

Packing: Bundled to Ease Installation

No.	Specification	QTY	Remarks
1	H05VV-F .75/3C 300V 70° Black	1 PC	
2	Plug Schuko CEE 7/7 Black	1 PC	Angled Down
3	Connector IEC 60320 C13 Black	1 PC	
4	LABEL: (40+30) * 30 mm	1 PC	MAX Length = 73mm

Mold Embossing List	
Vendor File #	
Power Fig	E250704
Stay Online	E250704
Yung Li	E152635
SSEMCO	E340286
Scolmore	E361125
Volex	E62405
Well Shin	E115330

Tolerances
> 0 ± 0.30 mm
>1.0 ± 0.50 mm
>10.0 ± 1.0 mm
>20.0 ± 2.0 mm
Angle: ± 1°

Approved		Date		**StayOnline®**			
Checked		Date		Customer			
Drawn	YL	Date	06Sept2018	Model #	PFCEE7/7D.75C1339		
Item No.	1159			Material	PVC	Units	mm
Drawing No.	1159	Rev.	A	Scale			