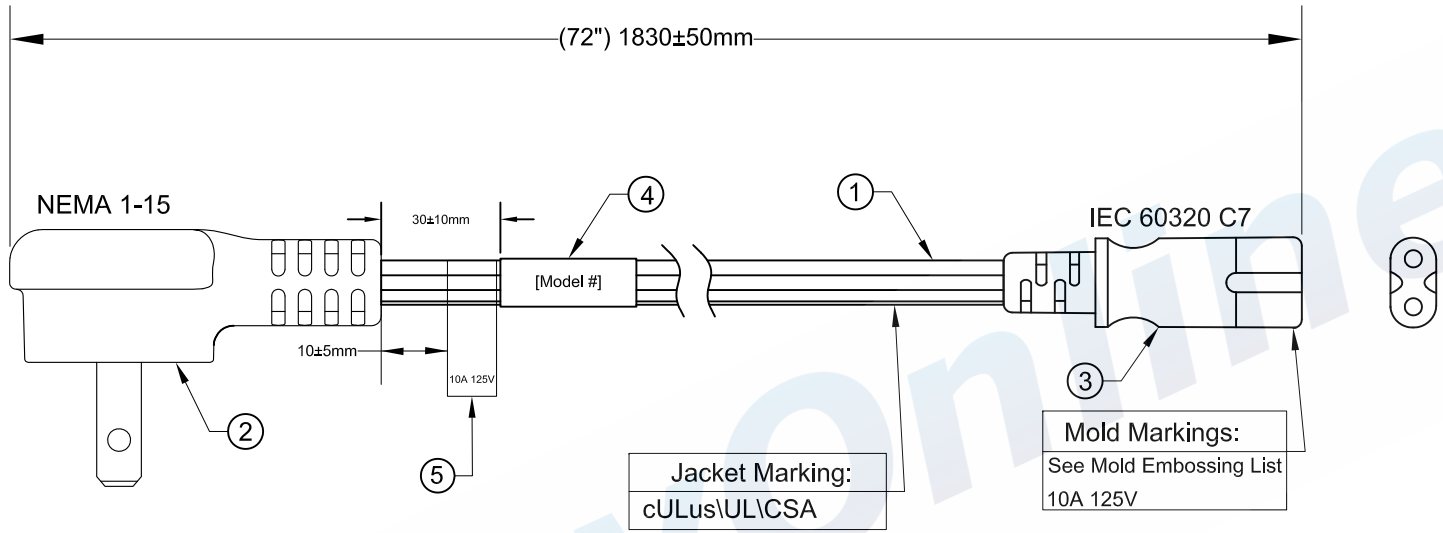

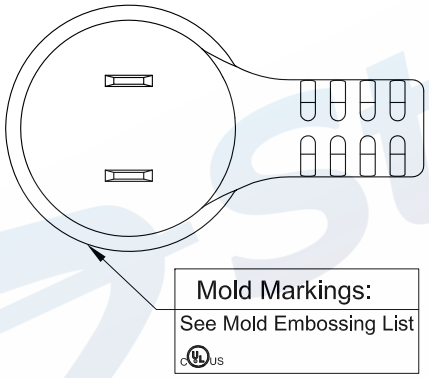

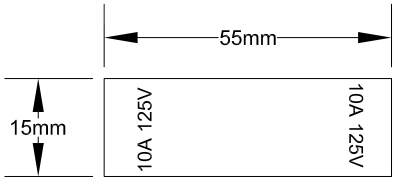

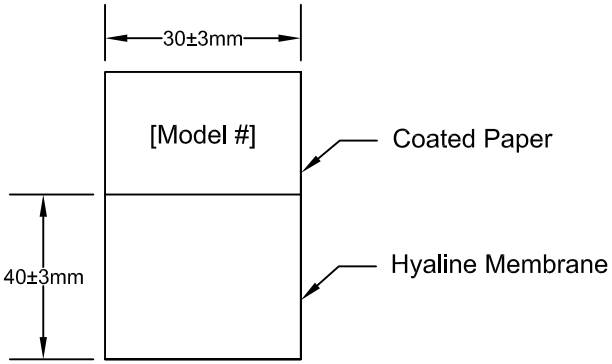

Packing: Bundled to Ease Installation

No.	Specification	QTY	Remarks
1	SPT-2 18/2c 105°C Black	1 PC	
2	Plug NEMA 1-15 Angled Up / Down Black	1 PC	
3	Connector IEC 60320 C7	1 PC	
4	LABEL: (40+30)*50mm	1 PC	
5	LABEL: 55*15mm	1 PC	

Mold Embossing List	
Vendor File #	
Power Fig	E250704
Stay Online	E250704
Yung Li	E152635
SSEMCO	E340286
Scolmore	E361125
Volex	E62405
Well Shin	E115330

Tolerances
> 0 ± 0.30 mm
>1.0 ± 0.50 mm
>10.0 ± 1.0 mm
>20.0 ± 2.0 mm
Angle: ± 1°

Approved		Date		StayOnline®			
Checked		Date		Customer			
Drawn	CJA	Date	03/27/18	Model #	PF115D18C772SPT2		
Item No.	1477			Material	PVC	Units	mm
Drawing No.	1477	Rev.	A	Scale			